3.1-3.6, 6.1-6.2 Review Key

① a) $f(x) = \dfrac{1}{\sqrt{x+8}}$

$x+8>0$

$x>-8$

$\boxed{D: (-8, \infty)}$

b) $g(x) = \dfrac{\sqrt{x-1}}{x^2-3x-10}$

$= \dfrac{\sqrt{x-1}}{(x+2)(x-5)}$

$x+2 \neq 0 \quad x-5 \neq 0$

$x \neq -2, 5$

$x-1 \geq 0$

$x \geq 1$

$\boxed{D: [1, 5) \cup (5, \infty)}$

c) $h(x) = \sqrt{10+|x|}$

$\boxed{D: (-\infty, \infty)}$

② $f(x) = \frac{1}{x}$ and $g(x) = x^2+4x-60$

a) $(f \cdot g)(x)$

$f(x) \cdot g(x) = \frac{1}{x}(x^2+4x-60)$

$= \boxed{x+4-\frac{60}{x}}$

b) $(f+g)(5)$

$f(5)+g(5) = \frac{1}{5} + 5^2+4(5)-60$

$= \frac{1}{5}+25+20-60$

$= \boxed{-14.8}$

c) $(f \circ f)(10)$

$f(f(10)) = f\left(\frac{1}{10}\right)$

$= \dfrac{1}{\frac{1}{10}}$

$= \boxed{10}$

d) $(f \circ g)(x)$

$f(g(x)) = \boxed{\dfrac{1}{x^2+4x-60}}$

e) Domain of $(g \circ f)(x)$

$g(f(x)) = \left(\frac{1}{x}\right)^2 + 4\left(\frac{1}{x}\right) - 60$

$= \frac{1}{x^2} + \frac{4}{x} - 60$

$\boxed{D: (-\infty, 0) \cup (0, \infty)}$

② continued... $f(x)=\frac{1}{x}$ and $g(x)=x^2+4x-60$

f) $f(-x)=\frac{1}{-x}$

$\Rightarrow$ $\boxed{f(x) \text{ is odd}}$

g) $g(-x)=(-x)^2+4(-x)-60$

$= x^2-4x-60$

$\Rightarrow$ $\boxed{f(x) \text{ is neither odd or even}}$

h) $f(x)$ is one-to-one since it passes the horizontal line test

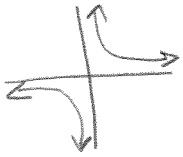

i) $g(x)$ is not one-to-one since it does not pass the horizontal line test

(any parabola)

③

$$f(x)=\begin{cases} 2 & x<-1 \\ x^2 & x=-1 \\ \frac{1}{x} & x>-1 \end{cases}$$

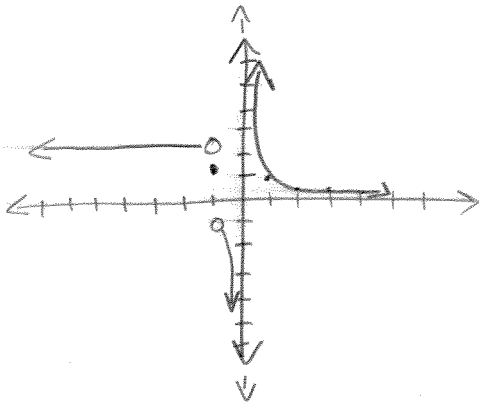

④ a) $(f \circ g)(2)$

$f(g(2))$

$f(-3)$

$\boxed{4}$

b) neither because $f(-x) \neq f(x)$ and $f(-x) \neq -f(x)$ for all x.

c) not one-to-one since both -3 and 9 have an output of 4.

⑤ $f(x) = 2x^2 + 5$

$$\frac{f(x+h) - f(x)}{h} = \frac{2(x+h)^2 + 5 - (2x^2+5)}{h}$$

$$= \frac{2(x^2 + 2xh + h^2) + 5 - 2x^2 - 5}{h}$$

$$= \frac{\cancel{2x^2} + 4xh + 2h^2 \cancel{+5} \cancel{-2x^2} \cancel{-5}}{h}$$

$$= \frac{4xh + 2h^2}{h}$$

$$= \frac{\cancel{h}(4x + 2h)}{\cancel{h}}$$

$$= \boxed{4x + 2h}$$

⑥ a) D: $(-5, 5)$

b) R: $[-2, 1)$

c) y-int: $(0, -1)$

d) x-int: $(-4, 0)$ and $(4, 0)$

e) $f(4) = 0$

f) $x = -2$ and $x = 2$

g) $(-5, -4] \cup [4, 5)$

h) dec: $(-5, -2)$ and $(0, 2)$

i) inc: $(-2, 0)$ and $(2, 5)$

j) $f^{-1}(x)$

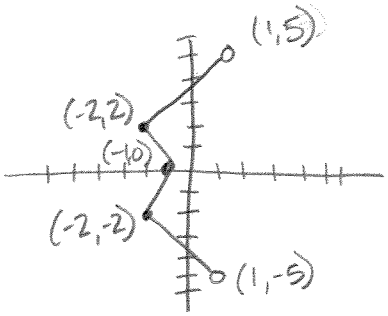

k) $F(x) = -3f(x+4) - 1$

reflection over x-axis

horizontal shift left 4

vertical shift down 1

l)

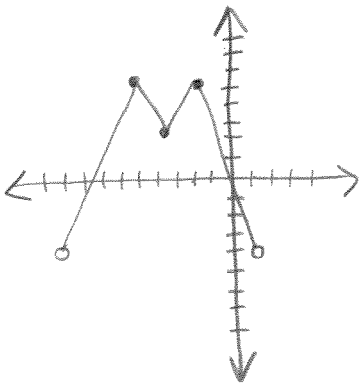

X	Y
-5	1
-2	-2
0	-1
2	-2
5	1

-9 -8 -4
-6 6 5
-4 3 2
-2 6 5
1 -3 -4

(6) continued

m) $f(x)$ is even because it is symmetric with respect to the y-axis

n) $f(x)$ is not one-to-one since it does not pass the horizontal line test

(7) $f(x) = 3x - 2 \qquad g(x) = \frac{x+2}{3}$

$$f(g(x)) = 3\left(\frac{x+2}{3}\right) - 2$$
$$= x + 2 - 2$$
$$= x$$

$$g(f(x)) = \frac{3x-2+2}{3}$$
$$= \frac{3x}{3}$$
$$= x$$

$\therefore$ $f(x)$ and $g(x)$ are inverses.

(8) $f(x) = \frac{-x+3}{8x+5}$

a) inverse

$$x = \frac{-y+3}{8y+5}$$
$$(8y+5)x = -y+3$$
$$8xy + 5x = -y + 3$$
$$+y \quad -5x \qquad +y \quad -5x$$
$$8xy + y = 3 - 5x$$
$$y(8x+1) = 3 - 5x$$
$$y = \frac{3-5x}{8x+1}$$
$$\boxed{f^{-1}(x) = \frac{3-5x}{8x+1}}$$

b) domain of $f^{-1}(x)$

$$8x + 1 \neq 0$$
$$x \neq \frac{-1}{8}$$
$$\boxed{D: \left(-\infty, \frac{-1}{8}\right) \cup \left(\frac{-1}{8}, \infty\right)}$$

c) range of $f^{-1}(x)$ is domain of $f(x)$

$$8x + 5 \neq 0$$
$$x \neq \frac{-5}{8}$$
$$\boxed{R: \left(-\infty, \frac{-5}{8}\right) \cup \left(\frac{-5}{8}, \infty\right)}$$

(9) $f(x) = 2x^2 - x + 1$

a) $f(2) = 2(2)^2 - 2 + 1$
$= 7$

$(2, 7)$

$f(4) = 2(4)^2 - 4 + 1$
$= 29$

$(4, 29)$

ave rate of change:

$m = \frac{29-7}{4-2} = \frac{22}{2} = \boxed{11}$

b) $y - y_1 = m(x - x_1)$

$(x_1, y_1) = (2, 7)$

$m = 11$

$y - 7 = 11(x - 2)$

$y - 7 = 11x - 22$
$+7 \qquad +7$

$\boxed{y = 11x - 15}$

(10)

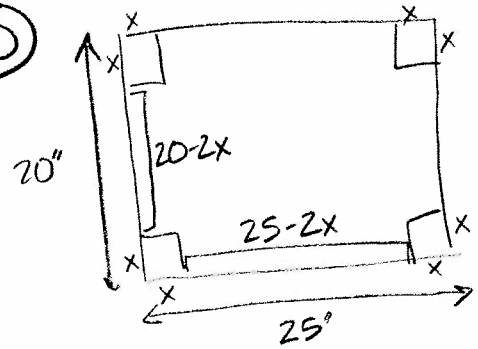

a) $\boxed{V = (20-2x)(25-2x)x}$

b) $V(3) = (20-2(3))(25-2(3))(3) = \boxed{798}$

c) $\boxed{x \approx 3.68}$

(11)

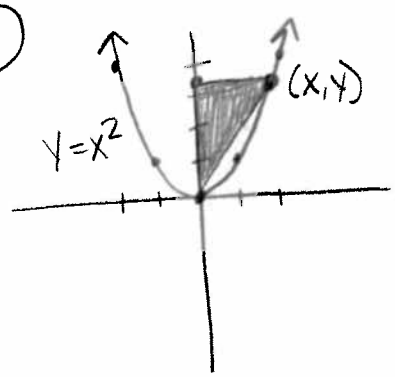

a) $A = \frac{1}{2}bh$

$A = \frac{1}{2}(x)(y)$

$A = \frac{1}{2}(x)(x^2)$

$\boxed{A = \frac{1}{2}x^3}$

b) $\boxed{D: (0, \infty)}$