Advanced Algebra
Semester 2 Final Review

Name: Key
Date: _____

Graph the functions. State the domain and range. Also state the asymptotes if there are any. The chapter the problem is found is given in parentheses.

1. (7) $f(x)=\sqrt{x}$

X	Y
0	0
1	1
4	2
9	3

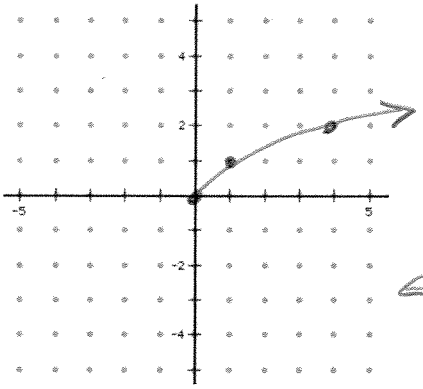

Domain: $x \geq 0$

Range: $y \geq 0$

2. (7) $f(x)=\sqrt[3]{x+3}-1$
left3 down1

X	Y
-11	-2
-4	-1
-3	0
-2	1
5	2

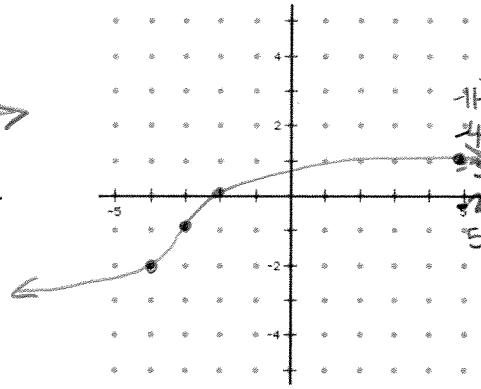

Domain: $\mathbb{R}$

Range: $\mathbb{R}$

3. (7) $f(x)=\sqrt{x+3}-1$
left3 down1

X	Y
-3	0
-2	1
1	2
6	3

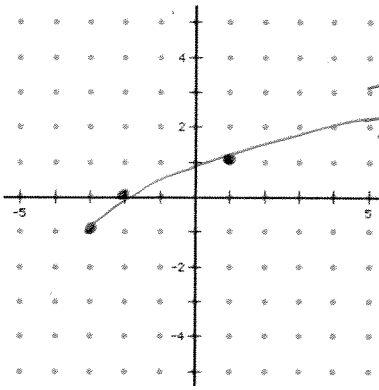

Domain: $x \geq -3$

Range: $y \geq -1$

4. (8) $f(x)=2(.5)^x-3$ down3
vertical stretch by 2
$y=(.5)^x$

X	Y
-2	4
-1	2
0	1
1	.5
2	.25

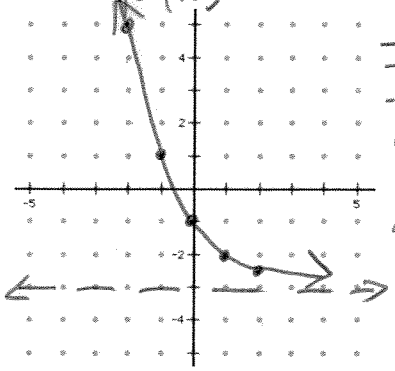

Domain: $\mathbb{R}$

Range: $y>3$

Asymptote: $y=3$

5. (8) $f(x)=(2)^{x+1}-3$ down3
left1
$y=2^x$

X	Y
-3	.25
-2	.5
-1	1
0	2
1	4

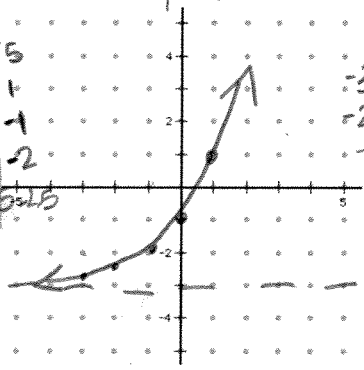

Domain: $\mathbb{R}$

Range: $y>3$

Asymptote: $y=3$

6. (8) $f(x)=\log_3(x+1)-2$
left1 down2
$y=\log_3 x$ $\quad 3^y=x$

X	Y
$-\frac{8}{9}$	-2
$-\frac{2}{3}$	-1
0	0
2	1
8	2

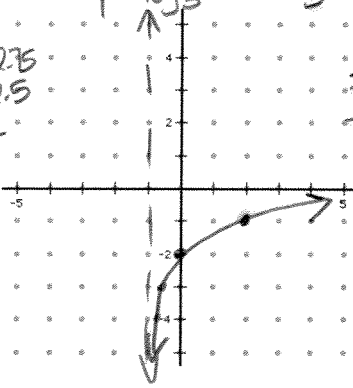

Domain: $x>-1$

Range: $\mathbb{R}$

Asymptote: $x=-1$

7. (8) $f(x) = \ln x - 2$ down 2

$y = \ln x$ $e^y = x$

x	y
.1	-2.4
.4	-1.3
1	0-2
1.7	1 -1
1.4	2 0

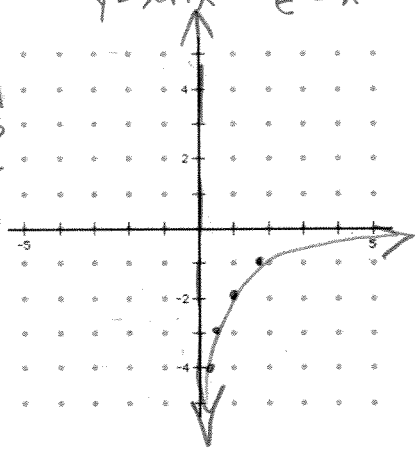

Domain: $x > 0$

Range: $\mathbb{R}$

Asymptote: $x = 0$

8. (9) $y = \dfrac{1}{x+2} - 2$ down 2

$y = \dfrac{1}{x}$ left 2

x	y
-4	2 -.5 -2.5
-3	-1 -3
-2	und
-1	1 -1
0	2 .5 -1.5

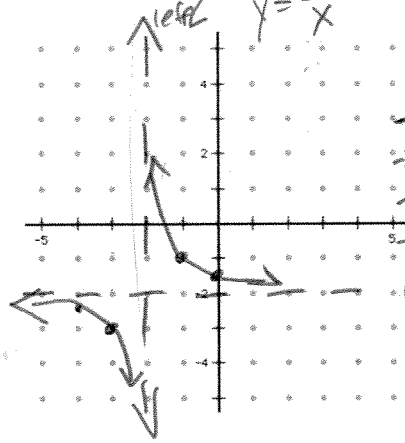

Domain: $x \neq -2$

Range: $y \neq -2$

Asymptotes: $x = -2$, $y = -2$

9. (9) $y = \dfrac{3}{x+1} + 2$ up 2

$y = \dfrac{3}{x}$ left 1

x	y
-3	-2 -1
-2	-1 -3
-1	0 und
0	1 3
1	2 1.5

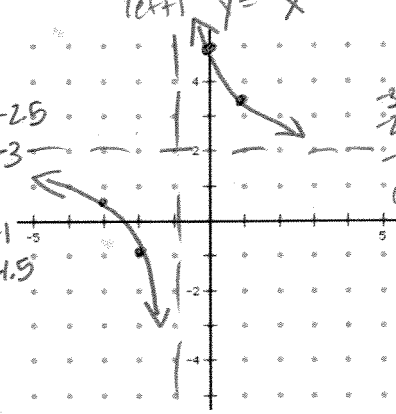

Domain: $x \neq -1$

Range: $y \neq 2$

Asymptotes: $x = 1$, $y = 2$

(7) Simplify each radical expression. Assume all variables are positive.

10. $\sqrt{36x^4}$

$\boxed{6x^2}$

11. $\sqrt[4]{m^{18}n^8}$

$\boxed{m^4 n^2 \sqrt[4]{m^2}}$

12. $\sqrt[3]{10a^4} \bullet \sqrt[3]{20a}$

$\sqrt[3]{200a^5}$

$2\sqrt[3]{8}\ \sqrt[3]{25}\ \sqrt[3]{a^3}\ \sqrt[3]{a^2}$

a

$\boxed{2a\sqrt[3]{25a^2}}$

13. $\dfrac{\sqrt{18x^5y}}{\sqrt{2x}} = \sqrt{9x^4y}$

$\boxed{3x^2\sqrt{y}}$

14. $\left(x^{-\frac{4}{3}}y^{\frac{3}{5}}\right)^{15}$ $x^{-20}\ y^9$

$\boxed{\dfrac{y^9}{x^{20}}}$

15. $\left(\dfrac{81y^{16}}{16x^{12}}\right)^{\frac{1}{4}}$ $\dfrac{81^{\frac{1}{4}}\ y^4}{16^{\frac{1}{4}}\ x^3}$

$\dfrac{\sqrt[4]{81}\ y^4}{\sqrt[4]{16}\ x^3} = \boxed{\dfrac{3y^4}{2x^3}}$

16. $2\sqrt{7} + 3\sqrt{7}$

$\boxed{5\sqrt{7}}$

27. $\sqrt{27} + \sqrt{48}$

$3\sqrt{9}\sqrt{3}\ 4\sqrt{16}\sqrt{3}$

$3\sqrt{3} + 4\sqrt{3}$

$\boxed{7\sqrt{3}}$

28. $8\sqrt{45x} - 3\sqrt{80}$

$8\sqrt{9}\sqrt{5}\sqrt{x} - 3\sqrt{16}\sqrt{5}$

3 4

$\boxed{24\sqrt{5x} - 12\sqrt{5}}$

(7) Let $f(x) = x^2$ and $g(x) = 3x + 1$. Evaluate each expression.

19. $f(x) - g(x)$

$x^2 - (3x+1)$

$\boxed{x^2 - 3x - 1}$

20. $(f \circ g)(x)$

$f(g(x))$

$(3x+1)^2$

$\boxed{9x^2 + 6x + 1}$

21. $(g \circ f)(x)$

$g(f(x))$

$\boxed{3x^2 + 1}$

(7) For each function f(x), find the inverse $f^{-1}(x)$.

22. $f(x) = 6x + 1$

$x = 6y + 1$
$-1 \quad -1$
$\frac{x-1}{6} = \frac{6y}{6}$
$\boxed{y = \frac{x-1}{6}}$

23. $f(x) = \sqrt{x+4}$

$x^2 = \sqrt{y+4}^{\,2}$
$x^2 = y + 4$
$-4 \quad -4$
$\boxed{x^2 - 4 = y}$

24. $f(x) = 3x^2 + 1$

$x = 3y^2 + 1$
$-1 \quad -1$
$\frac{x-1}{3} = \frac{3y^2}{3}$
$\sqrt{\frac{x-1}{3}} = \sqrt{y^2}$
$\boxed{y = \pm\sqrt{\frac{x-1}{3}}}$

(8) Write each expression as a single logarithm.

25. $3\log x + 4\log x$

$\log x^3 x^4 \Rightarrow \boxed{\log x^7}$

26. $\log r - \log t + 2\log s$

$\boxed{\log \frac{r}{t} \cdot s^2}$

(8) Expand each logarithm:

27. $\log_b 2x^2y^3$

$\log_b 2 + 2\log_b x + 3\log_b y$

28. $\log_b \frac{x^2}{2y}$

$2\log_b x - \log_b 2y$

(9) Simplify each rational expression. State any restrictions.

29. $\frac{x^2 + 9x + 18}{x + 6}$

$\frac{\cancel{(x+6)}(x+3)}{\cancel{x+6}}$
$\boxed{x+3 \text{ for } x \neq -6}$

30. $\frac{2x^2 + 5x - 3}{x^2 - 4x} \cdot \frac{2x^3 - 8x^2}{x^2 + 6x + 9}$

$\frac{(2x-1)\cancel{(x+3)}}{\cancel{x}\cancel{(x-4)}} \cdot \frac{2x^{\cancel{2}}\cancel{(x-4)}}{\cancel{(x+3)}(x+3)}$
$\boxed{\frac{2x(2x-1)}{x+3} \text{ for } x \neq 0, 4, -3}$

31. $\frac{x^2 - 2x - 8}{x + 3} \div \frac{x - 4}{x + 3}$

$\frac{\cancel{(x-4)}(x+2)}{\cancel{x+3}} \cdot \frac{\cancel{x+3}}{\cancel{x-4}}$
$\boxed{x+2 \text{ for } x \neq -3, 4}$

(9) Add or Subtract. Simplify where possible:

32. $\frac{2(6x+1)}{2(x+2)} + \frac{2x-5}{\cancel{2x+4}\ 2(x+2)}$

$\frac{12x+2}{2(x+2)} + \frac{2x-5}{2(x+2)} = \boxed{\frac{14x-3}{2(x+2)}}$

33. $\frac{(x+7)\ 2x}{(x+7)\ x-5} - \frac{x}{x+7} \cdot \frac{(x-5)}{(x-5)}$

$\frac{2x^2+14x}{(x+7)(x-5)} - \frac{x^2-5x}{(x+7)(x-5)} = \boxed{\frac{x^2+19x}{(x+7)(x-5)}}$

(9) Variation

34. Sound intensity S varies inversely to the square of the distance d from the source. Suppose the sound intensity is 30 watts per square meter (W / m^2) at 8 meters. What is the sound intensity at 4 meters?

$S = \frac{k}{d^2}$

$30 = \frac{k}{8^2}$

$k = 1920$

$S = \frac{1920}{d^2}$

$S = \frac{1920}{4^2} = \boxed{120\ w/m^2}$

Write the function model for the given variation.

35. w varies jointly with x and the square of y if k=5.

$W = 5xy^2$

36. P varies directly with t and inversely with r if k=8.

$P = \frac{8t}{r}$

Solve the equation. In questions 1-4, be sure to check for extraneous solutions. The chapter the problem is from is given in parentheses.

37. (7) $x^{\frac{1}{2}} + 3 = 4$

$-3 \quad -3$

$x^{\frac{1}{2}\cdot 2} = 1^2$

$\boxed{x = 1}$

38. (7) $\frac{3\sqrt{2x+4}}{3} = \frac{12}{3}$

$\sqrt{2x+4}^{\,2} = 4^2$

$2x + 4 = 16$

$2x = 12$

$\boxed{x = 6}$

39. (7) $\sqrt[3]{x^2+9}^{\,3} = 3^3$

$x^2 + 9 = 27$

$-9 \quad -9$

$\sqrt{x^2} = \sqrt{18}$

$x = \pm\sqrt{18} = \boxed{\pm 3\sqrt{2}}$

40. (7) $\sqrt{x+7}^{\,2} = (x+1)^2$

$x + 7 = x^2 + 2x + 1$

$-x - 7 \quad -x - 7$

$0 = x^2 + x - 6$

$0 = (x+3)(x-2)$

$0 = x + 3 \quad 0 = x - 2$

$\cancel{x = -3} \quad \boxed{x = 2}$

Check:

$\sqrt{-3+7} \stackrel{?}{=} -3 + 1$

$\sqrt{4} \stackrel{?}{\neq} -2$

$\sqrt{2+7} \stackrel{?}{=} 2 + 1$

$\sqrt{9} \stackrel{?}{=} 3$

$3 = 3$ ✓

41. (8) $10^{2(x+1)} = 10^{5x-2}$

$2(x+1) = 5x - 2$

$2x + 2 = 5x - 2$

$-2x + 5 \quad -2x + 5$

$\frac{7}{3} = \frac{3x}{3}$ $\boxed{x = \frac{7}{3}}$

42. (8) $2^{x+11} = 4^{2x+1}$

$2^{x+11} = 2^{2(2x+1)}$

$x + 11 = 2(2x+1)$

$x + 11 = 4x + 2$

$-x - 2 \quad -x - 2$

$9 = 3x$ $\boxed{x = 3}$

43. (8) $7^{x-3} = 25$

$\log_7 25 = x - 3$

$\frac{\log 25}{\log 7} = x - 3$

$1.69 \approx x - 3$

$+3 \quad +3$

$\boxed{x \approx 4.65}$

44. (8) $e^{3x} = 12$

$\ln 12 = 3x$

$2.48 \approx 3x$

$\boxed{x \approx .83}$

45. (8) $\log 3x = 1$

$\frac{10^1}{3} = \frac{3x}{3}$

$\boxed{x = \frac{10}{3}}$

46. (8) $3\ln x + \ln 5 = 7$

$\ln x^3 \cdot 5 = 7$

$\frac{e^7}{5} = \frac{x^3 \cdot 5}{5}$

$x^3 \approx 219.32$

$\boxed{x \approx 6.03}$

LCM: 6

47. (9) $\frac{1}{2} - x = \frac{x}{6}$

$3 - 6x = x$

$+6x \quad +6x$

$\frac{3}{7} = \frac{7x}{7}$ $\boxed{x = \frac{3}{7}}$

LCM: $3(2x-1)$

48. (9) $\frac{2}{2x-1} = \frac{x}{3}$

$6 = x(2x-1)$

$6 = 2x^2 - x$

$0 = 2x^2 - x - 6$

$0 = (2x+3)(x-2)$

$2x+3=0 \quad x-2=$

$\boxed{x = \frac{-3}{2} \quad x = 2}$

49. (9) $\frac{3}{2x} - \frac{2}{3x} = 5$ LCM: $6x$

$9 - 4 = 30x$

$\frac{5}{30} = \frac{30x}{30}$

$\boxed{x = \frac{1}{6}}$

50. (9) $\frac{2}{x+1} = 2 + \frac{6}{x+1}$ LCM: $x+1$

$2 = 2(x+1) + 6$

$2 = 2x + 2 + 6$

$2 = 2x + 8$

$-8 \quad -8$

$\frac{-6}{2} = \frac{2x}{2}$ $\boxed{x = -3}$

51. (8) You purchased land for $50,000 in 1980. The value of the land increased by 4% per year. What is the value of the land in the year 2000?

$y = 50{,}000(1 + .04)^{20} = \boxed{\$109{,}556.16}$

52. (8) You deposit $1500 in a bank account. The account pays 1.75% annual interest compounded annually. What is the balance after 3 years?

$y = 1500(1 + .0175)^3 = \boxed{\$1580.14}$

53. (8) You buy a new car for $21,000. It depreciates by 10.5% each year. Find when the car will have a value of $17,000.

$\frac{17000}{21000} = \frac{21{,}000(1 - .105)^t}{21000}$

$.8095 = .895^t$

$\log_{.895} .8095 = t$

$\frac{\log .8095}{\log .895} = \boxed{1.91 \text{ yrs}}$

54. (8) You deposit $850 in an account that pays 6.5% annual interest compounded continuously. What is the balance after 5 years?

$y = 850e^{.065(5)} = \boxed{\$1176.43}$

Statistics

55. Is the following normally distributed, positively skewed, or negatively skewed?

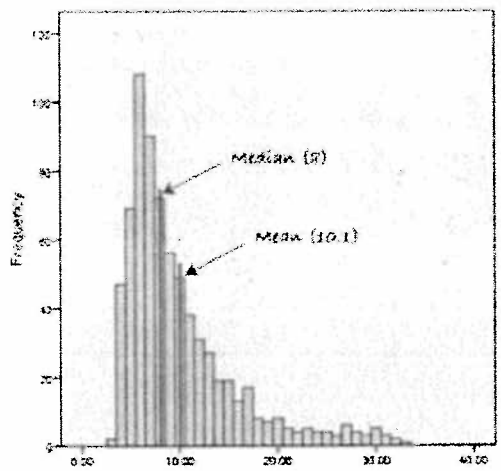

positively skewed

56. Sketch a normal curve and label 3 standard Deviations above and below the mean if the mean is 62 and the standard deviation is 4.5.

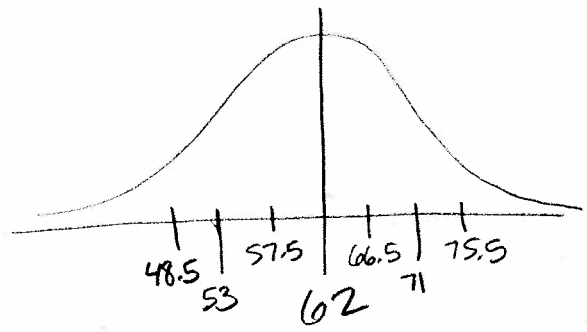

57. Make a box and whisker plot of the following data and then answer the questions.

72 65 51 89 93 93 86 62

a) What is the range? 93-51 = 42

b) What is the interquartile range? 91-63.5 = 27.5

c) What is the median? 79